Current part is item (15) on diagram. Available at www.oshkoshequipment.com

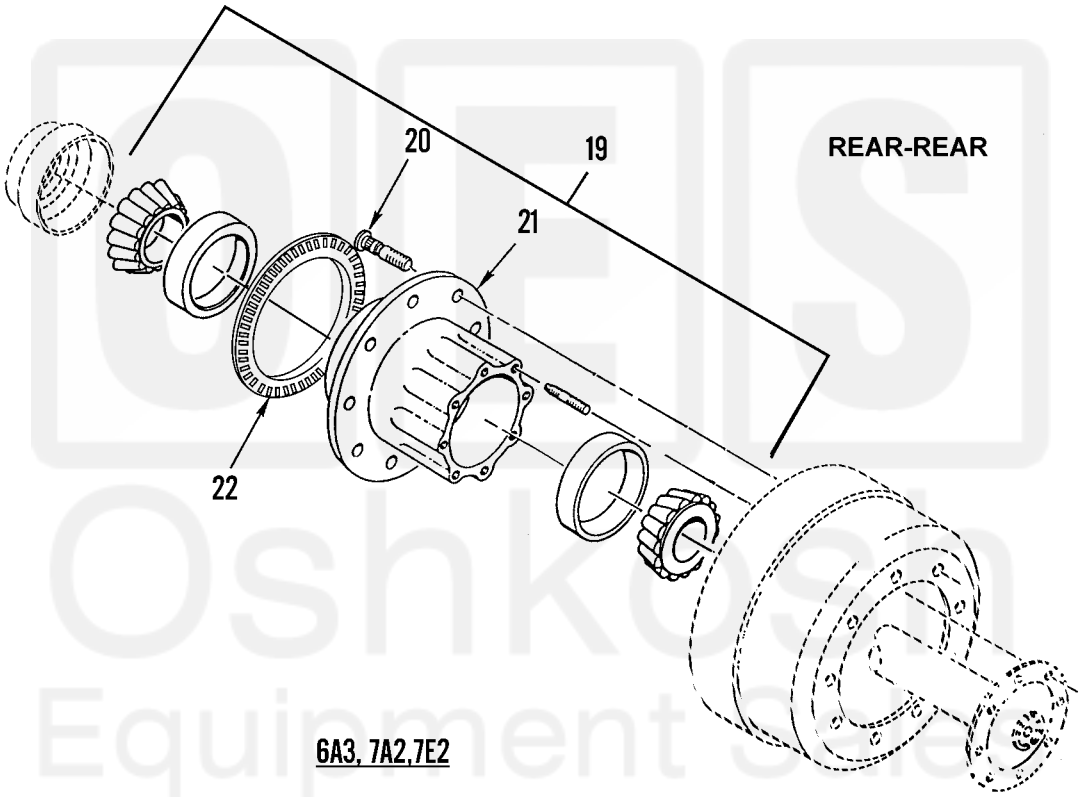

371-682-3

Figure 183. Rear Axle Hub Assembly (Sheet 3 of 3)

Current part is item (15) on diagram. Available at www.oshkoshequipment.com

Current part is item (15) on diagram. Available at www.oshkoshequipment.com

(1) ITEM NO	(2) SMR CODE	(3) NSN	(4) CAGEC	(5) PART NUMBER	(6) DESCRIPTION AND USABLE ON CODES(UOC)	(7) QTY
					GROUP 1311 WHEEL ASSEMBLY	
					FIG. 183 REAR AXLE HUB ASSEMBLY	
1	PAOZA	5330014463781	3D6E9	A-1205-N-2536	RETAINER,PACKING..... UOC:6A3,7A2,7E2	4
1	PAOZZ	5330011171014	52304	1277701	SEAL,PLAIN ENCASED..... UOC:5A3	4
2	PAOOO	2530014939155	4N501	104437	HUB,WHEEL,VEHICULAR REAR REAR, INCLUDES RACES ONLY..... UOC:5A3	2
2	PAOOO	2530014939148	4N501	104434	HUB,WHEEL,VEHICULAR FORWARD REAR, INCLUDES RACE ONLY..... UOC:5A3	2
3	PAOZZ	3110013311340	60038	594A-592A	.BEARING,ROLLER,TAPE..... UOC:5A3	1
4	PAOZZ	5306014790111	4N501	102290	BOLT,RIBBED NECK WHEEL STUD, USE 10 AT EACH WHEEL POSITION FOR FORWARD AND REAR AXLES..... UOC:5A3	10
5	PAOZA	2530014789211	4N501	103705	.SENSOR,ANTI-LOCK BR REAR-REAR ONLY, TONE RING..... UOC:5A3	2
6	PAOZZ	3110001004218	52676	12267670	.BEARING,ROLLER,TAPE..... UOC:5A3	1
7	PAOZZ	5307015228163	78500	R004953	.STUD,PLAIN..... UOC:6A3,7A2,7E2	8
7	PAOZZ	5307015032761	4N501	103430	.STUD,PLAIN 8 USED AT EACH WHEEL POSITION FOR FORWARD AND REAR AXLES. UOC:5A3	8
8	PAOZZ	2530014411881	73972	3600AX	BRAKE DRUM..... UOC:5A3	4
9	XDOZZ		18889	101160	STUD,PLAIN FOR HUBS WITH 0.97" DIA WHEEL STUD HOLES..... UOC:6A3,7A2,7E2	10
10	PAOZZ	5365014464328	3D6E9	1244-D-2214	SPACER,SPECIAL SHAP..... UOC:6A3,7A2,7E2	2
11	PAOZZ	3110001000683	60038	749	CONE AND ROLLERS,TA..... UOC:6A3,7A2,7E2	2
12	PAOZZ	3110001000339	60038	772	.CUP,TAPERED ROLLER..... UOC:6A3,7A2,7E2	4
13	PAOZA	5325014485676	78500	1229-K-4691	RING,RETAINING..... UOC:6A3,7A2,7E2	2
14	PAOZZ	5365014469560	3D6E9	2297-X-7122	SPACER,SPECIAL SHAP USE QTY 1 ON 6A3,7A2,7E2..... UOC:6A3,7A2,7E2	2
15	PAOZZ	5330013080175	3D6E9	A-1205-D-2162	SEAL,PLAIN ENCASED..... UOC:6A3,7A2,7E2	2
16	PAOZZ	3110001000337	65282	A8102	.CUP,TAPERED ROLLER..... UOC:6A3,7A2,7E2	4
17	PAOZZ	3110001000695	60038	782	CONE AND ROLLERS,TA..... UOC:6A3,7A2,7E2	1

Current part is item (15) on diagram. Available at www.oshkoshequipment.com